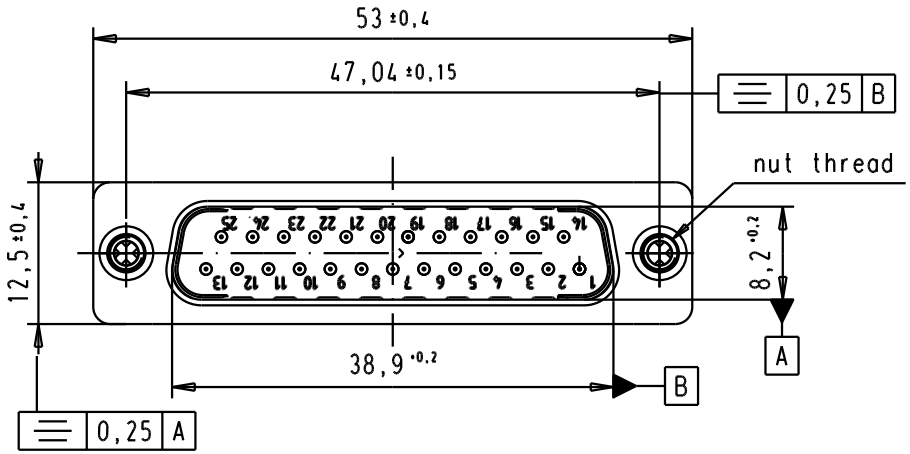

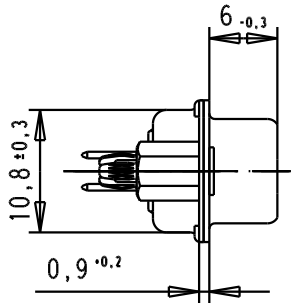

SPECIFICATION

Mating Cycles	500
Filter type	C
Capacitance	47pf ±20%
Working Voltage	100v
Current Rating	7,5A
Insulation Resistance	>1GΩ

FREQUENCY (MHz)	ATTENUATION dB
5	-
10	-
50	-
100	-
500	30dB
1000	35dB

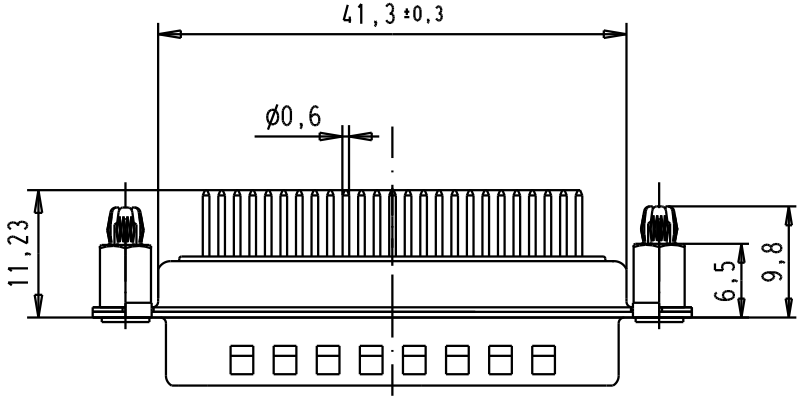

PCB Layout, Component side, PCB thickness 1,6 mm

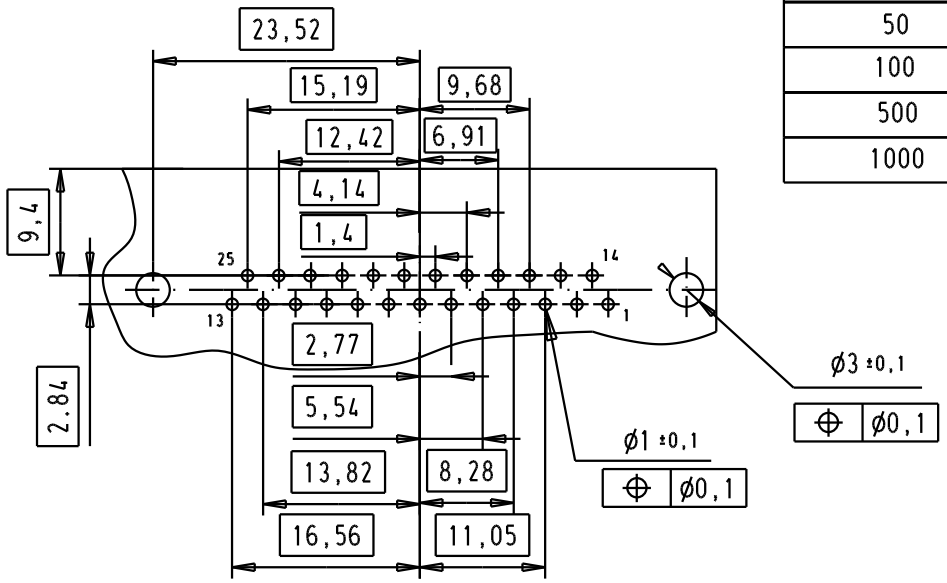

09643227216	M3		33423	06/02/06	JMDR
09643227215	UNC 4-40		31058	8-JUL-02	CV
Part number	Nut thread		Mod.	Dat.	Name

	Dat.	Name
Detail.	8-JUL-02	CV
Insp.		
Stand.		

All Dim. in mm
Orig. Size DIN A 4

D-Sub, male, straight, 25 Poles, turned solder pins, tin plated shell with dimples, spacer nuts and board-locks

Ma?Mstab/ Scale: 1.5:1

HARTING EURL
F-95972 Paris

TB 0964322721x

Sub.

Blatt/ Page 2/3