Alle Rechte vorbehalten/ *All rights reserved*

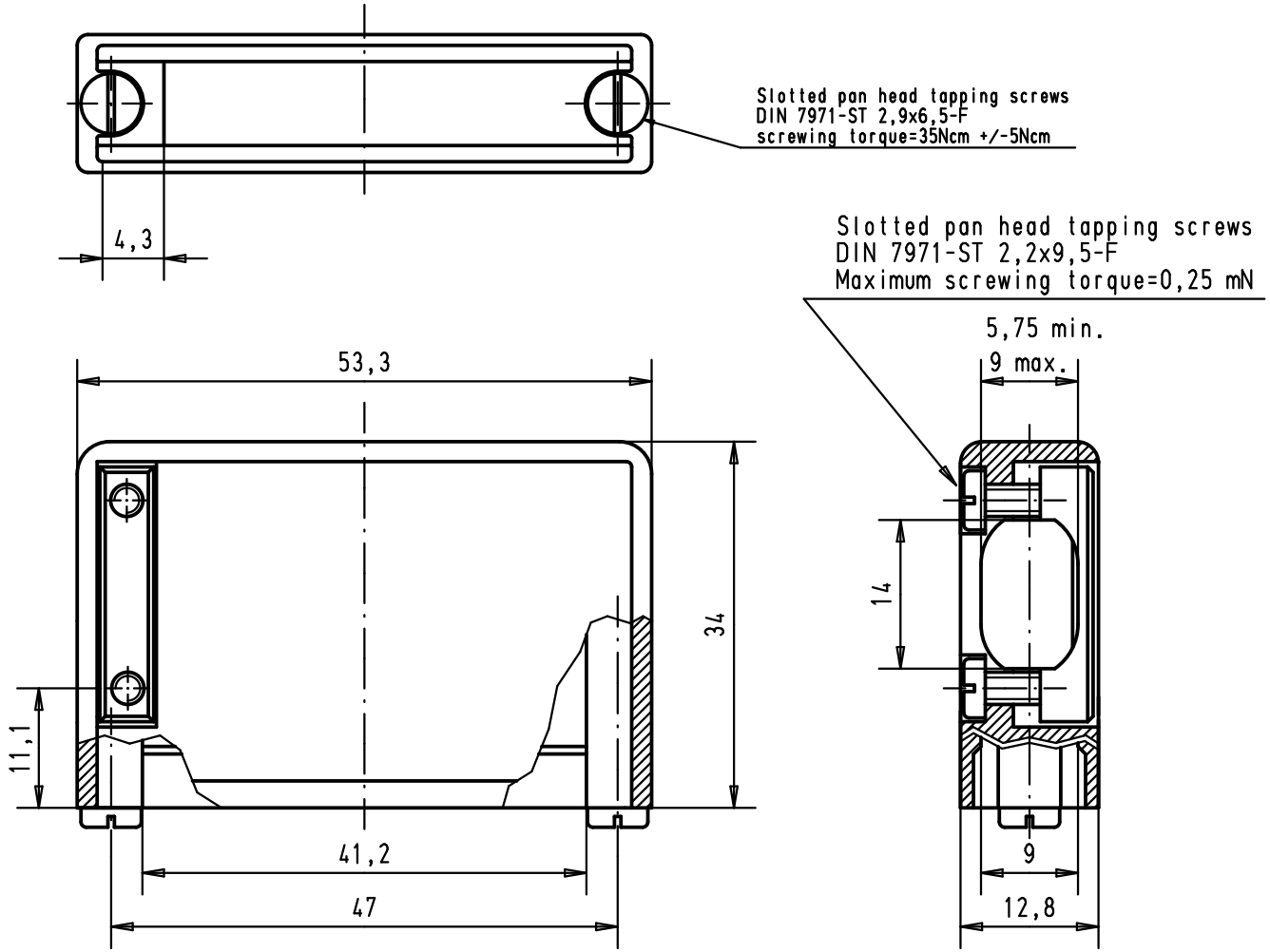

						Dat.	Name			Maßstab/ *Scale*
					Detail.	28-MAR-02	CV	All Dim. in mm Orig. Size DIN A 4	D-Sub, Hood 25 poles, for spring or slide locking,side cable entry	1.5:1
					Insp.	25-MAY-11	JMDV			
		EC03223	25-MAY-11	SD	Stand.					
09 67 025 0513	Thermoplastic metallized	31861	21-JAN-04	JFB	HARTING EURL F-95972 Paris				TB 0967025051x	Blatt/ *Page* 1/
09 67 025 0511	Thermoplastic grey RAL 7032	29760	28-MAR-02	CV						
Part number	Material	Mod.	Dat.	Name					Sub.	