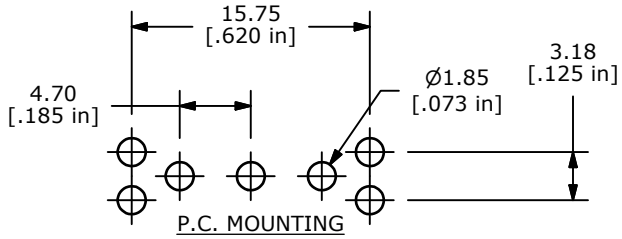

P.C. MOUNTING

▲ SWITCH FUNCTION		
POS. 1	POS. 2	POS. 3
(ON)	OFF	(ON)
2-3	OPEN	2-1

(B)

(ON)=MOMENTARY

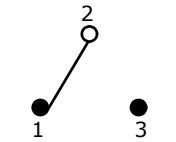

CIRCUIT: SPDT

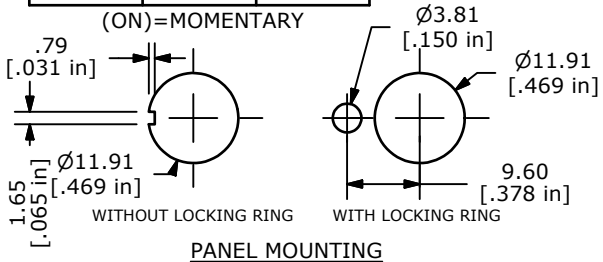

PANEL MOUNTING

NOTE:
1. ALL DIMENSIONS IN MM [INCH]
2. GENERAL TOLERANCE: X.X=±0.4
   X.XX=±0.25
3. TERMINAL NUMBERS FOR REF ONLY
▲4. PLATING MATERIAL: GOLD
5. RATING: 0.4 (VA) Max. @20V AC OR DC Max.
6. ELECTRIC LIFE: 40,000 make-and-break cycles at full load.
7. INSULATION RESISTANCE: 1,000 Mega-ohm min.
8. DIELECTRIC STRENGTH: 1,000 V RMS @sea level.
9. ▲OPERATING TEMP.: -30°C to 85°C
10. 2002/95/EC (ROHS) COMPLIANT
11. ▲ DENOTES CRITICAL PARAMETER.
12. HARDWARE TO BE SHIPPED BULK:
   (C) T100012-LOCK WASHER QTY-1
   T100003-LOCK RING QTY-1
   T100004-HEX NUT QTY-2

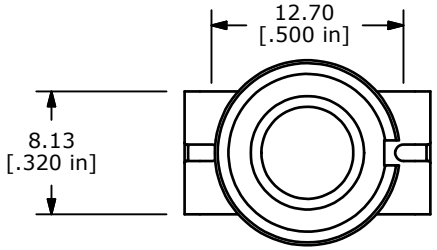

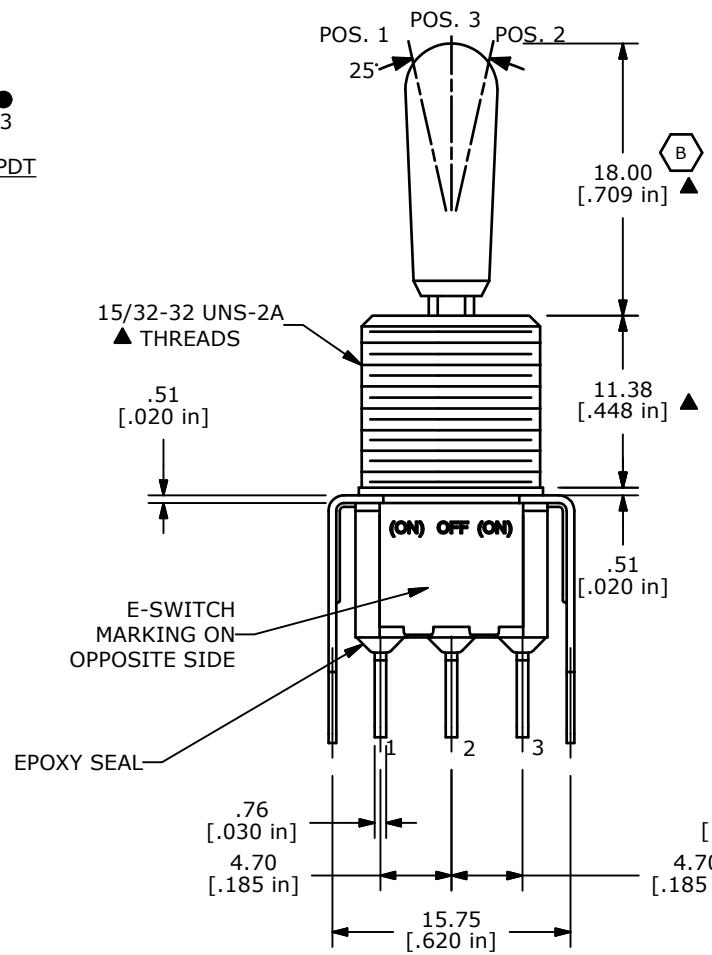

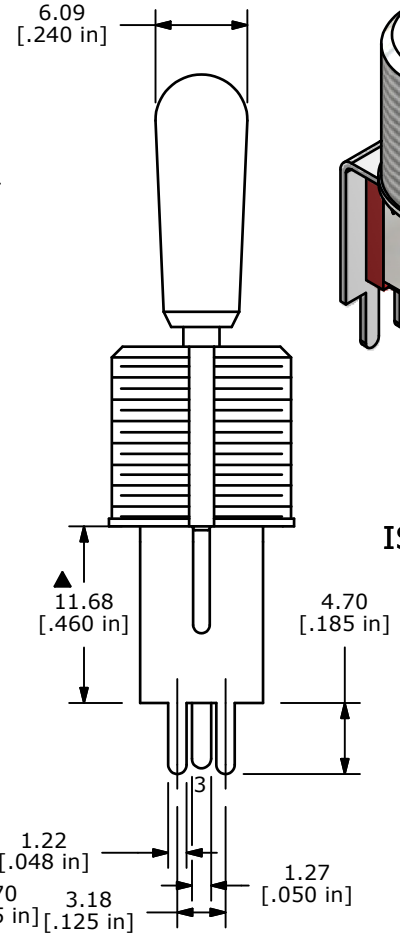

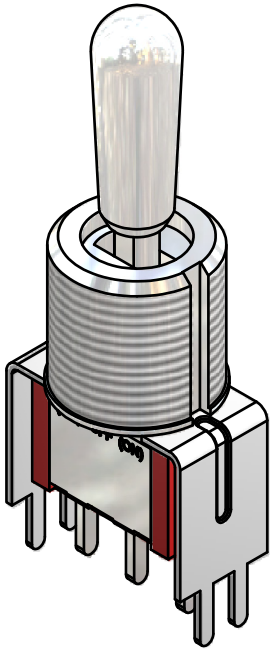

ISOMETRIC

REV	PCR NO	DESCRIPTION	DATE	BY
C	20177	CORRECT HARDWARE NOTE: 12	9/23/11	BGL
B	19444	CORRECT ACTUATOR DIM & FUNC. TABLE	11/16/10	BMA
A	15459	RELEASED FOR PRODUCTION	10/31/05	PH

THE INFORMATION CONTAINED IN THIS DOCUMENT IS PROPRIETARY TO E-SWITCH AND IS NOT TO BE COPIED OR TRANSFERRED

E-SWITCH®

TITLE 100SP4T8B13VS2REH

SCALE	DATE	DR	DWG	REV
2:1	10/31/2005	PH	ST114045	C