ITEM NO.	PART NUMBER	DESCRIPTION	QTY.	COMPONENT NOTES
1	50-00387	Connector, dc plug, 4.75x1.7xL19 mm, brass nickel plated, yellow insulator	1	
2	30-00003	Wire, 2C BC, 24 AWG, UL2468, 300V, 80C, 3.6 mm, VW-1, PVC, 76A	1	
3	24-00062	Overmold, PVC, black	1	

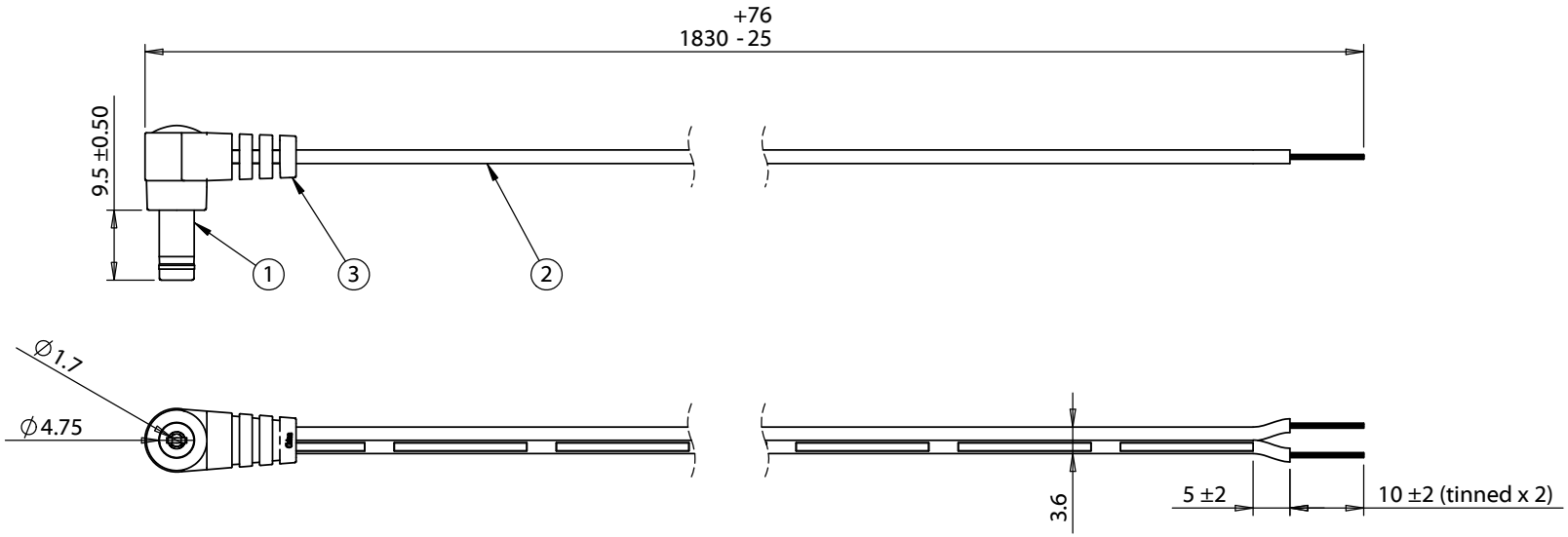

Notes:

Operating temperature: -10° to 80°C

Hi-Pot test: 600 Vac, 0.5 mA, 1 second

Wiring Diagram	
50-00387	wire color
center	black with stripe
sleeve	black

Revision:	Date:	Description:
A1	8/31/2011	Updated description, connector, and wire information
A2	1/23/2013	Added temperature rating
A3	1/25/2013	Updated rating
A4	10/9/2013	Changed connector to 50-00384
A5	11/1/2013	Changed connector to 50-00387

Prepared: GL 2016.05.06 08:03:32 -07'00'

Verified: LA Digitally signed by LA DN: cn=LA, o=Tensility, ou=Engineering, email=QA002@Tensility.com, c=US Date: 2016.05.06 17:27:58 -07'00'

Dimensions are in millimeters.
Tolerances:
X: ± 0.5 mm
X.X: ± 0.3 mm
X.XX: ± 0.05 mm

Notes:

RoHS and REACH compliant

Function test: no open, no short circuit, no intermittent

Description:

Cable, 1830 mm, 4.75x1.7x9.5 mm, 90° 50-00387 dc plug to stripped tinned, 24 AWG, 30-00003 wire

TENSILITY

tel 1.541.323.3228 *800* 877.670.7118
fax 1.541.323.4202 *web* tensility.com

Size: A

Part number: 053-0198R (CA-2199)

Scale: 1:1

Sheet 1 of 1

5 4 3 2 1