14539GA (145□ x 39L)

General Specifications

Motor Protection:
Auto Restart/Polarity Protection

Insulation Resistance:
10M Ω or over with a DC500V Megger

Dielectric Withstand Voltage: AC 700V 1s

Allowable Ambient Temperature Range:
-10°C ~ +60°C (Operating)
-40°C ~ +70°C (Storage)
(non-condensing environment)

Expected Life

25°C 100,000 Hours

Material

Casing : Plastic (Black) UL94V-0
Impeller : Plastic (Black) UL94V-0
Bearing : Ball Bearing
Lead Wire : UL1007, AWG24, +Red, -Black

Characteristic Curves

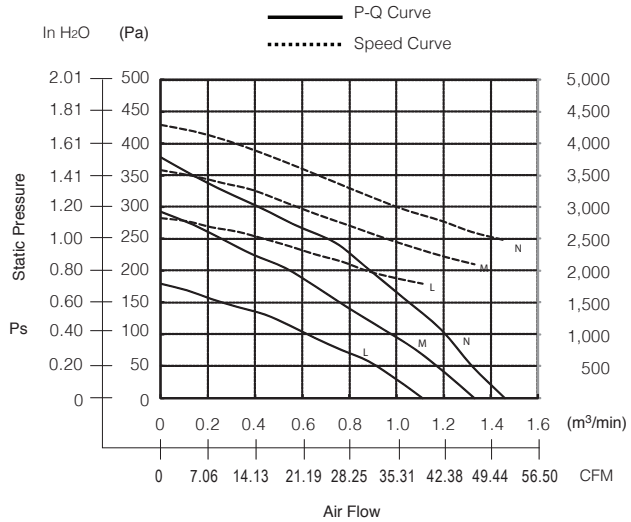

Outline

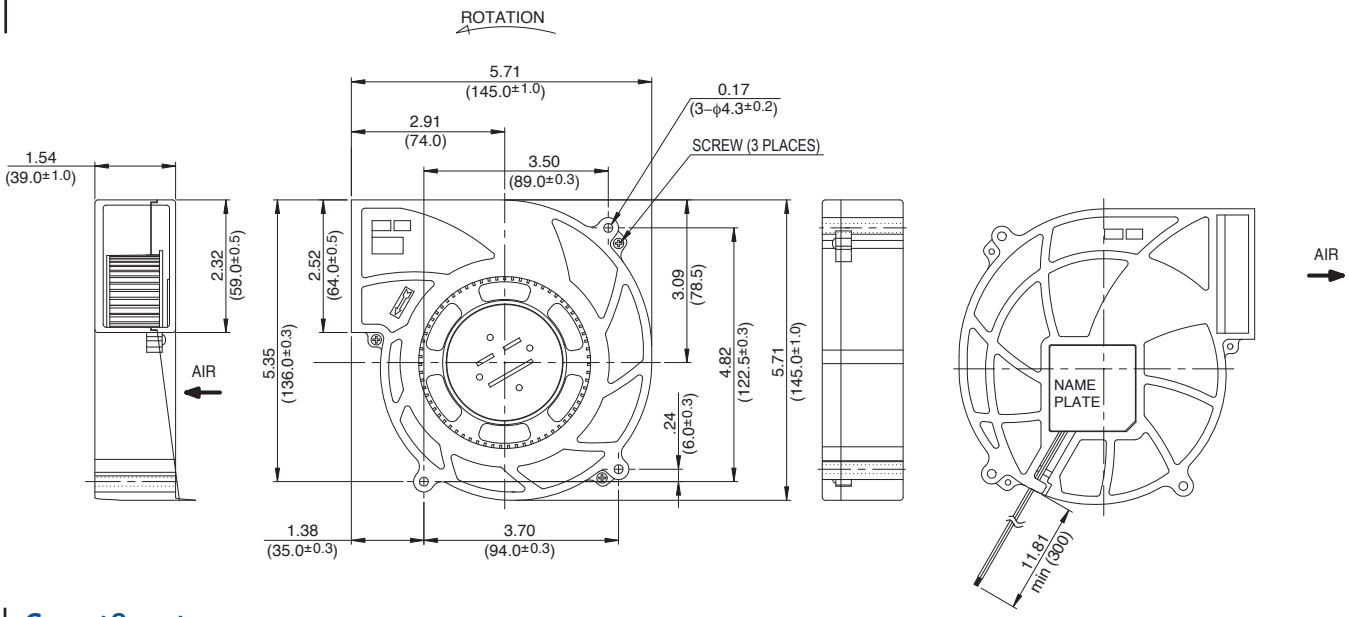

Specifications

MODEL	Rated Voltage	Operating Voltage	Current	Input Power	Speed	Max. Air Flow		Max. Static Pressure		Noise	Mass
	(V)	(V)	(A)*1	(W)*1	(min-1)*1	CFM*1	(m3/min)*1	in H2O	(Pa)*1	(dB)*1	(g)
14539GA-12L-AA-00	12	8.0 ~ 13.2	0.63	7.56	1800	38.85	1.10	0.72	180	51.0	390
14539GA-12M-AA-00	12	8.0 ~ 13.2	1.00	12.00	2100	46.97	1.33	1.16	290	53.0	390
14539GA-12N-AA-00	12	8.0 ~ 13.2	1.25	15.00	2450	51.21	1.45	1.55	385	54.5	390

Rotation: Clockwise Airflow Outlet: Air Out Over Struts *1: Average Values in Free Air Note: PWM/Locked Rotor/Tach Available