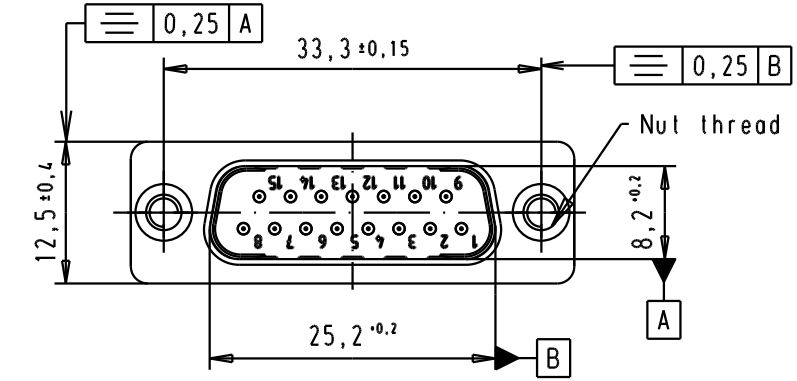

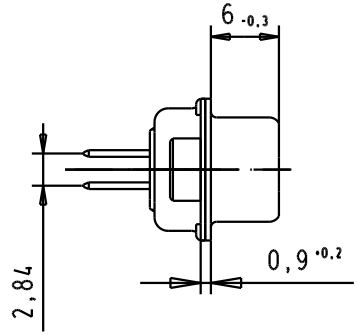

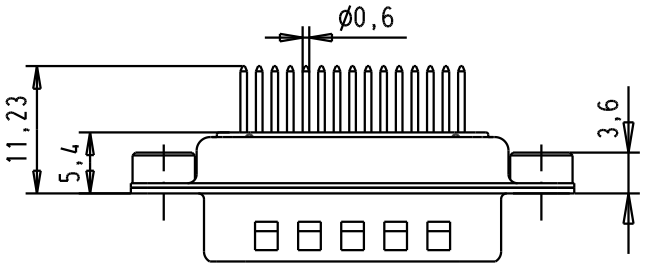

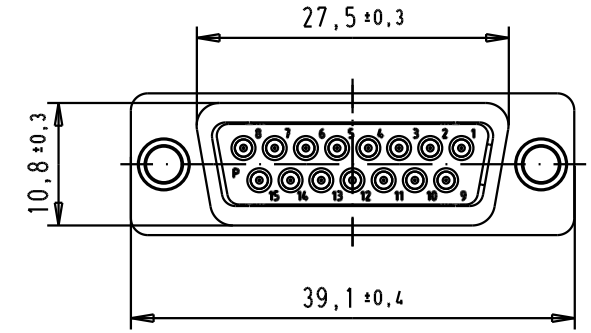

PCB Layout, Component side

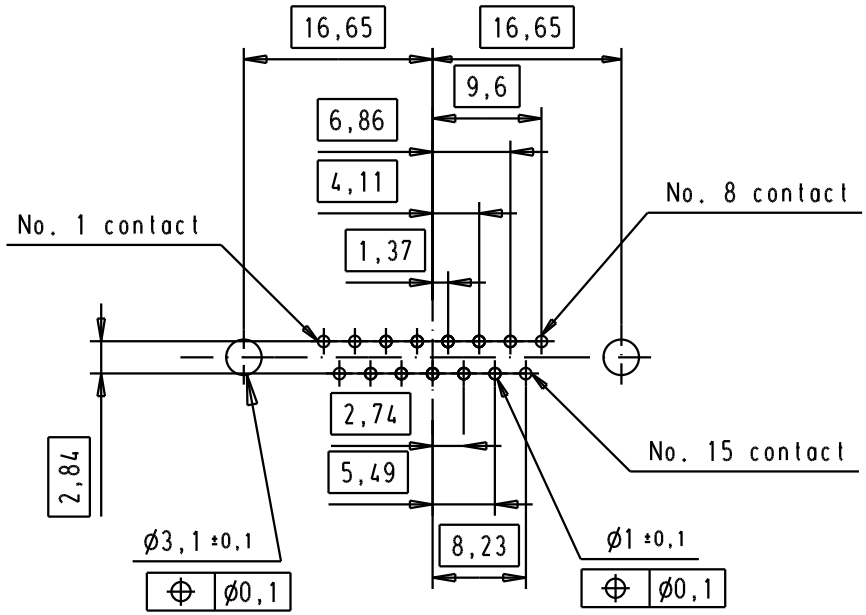

SPECIFICATION

Mating Cycles	500
Filter type	C
Capacitance	1000pf ±20%
Working Voltage	100v
Current Rating	7.5A
Insulation Resistance	>1GΩ

FREQUENCY (MHz)	ATTENUATION (dB)
5	1dB
10	3dB
50	12dB
100	20dB
500	34dB
1000	30dB

							Dat.	Name
						Detail.	8-JUL-02	CV
						Insp.		
						Stand.		
09642227238	M3		33079	29/08/05	JMDR			
09642227237	UNC 4-40		31058	8-JUL-02	CV			
Part number	Nut thread		Mod.	Dat.	Name			

All Dim. in mm
Orig. Size DIN A 4

D-Sub, male, straight, 15 Poles, solder pins, tin plated shell with dimples and clinch nuts

Ma?Mstab/ Scale 1.5:1

HARTING EURL
F-95972 Paris

TB 0964222723x

Sub.

Blatt/ Page 3/3