THIS IS A CONTROLLED DOCUMENT.

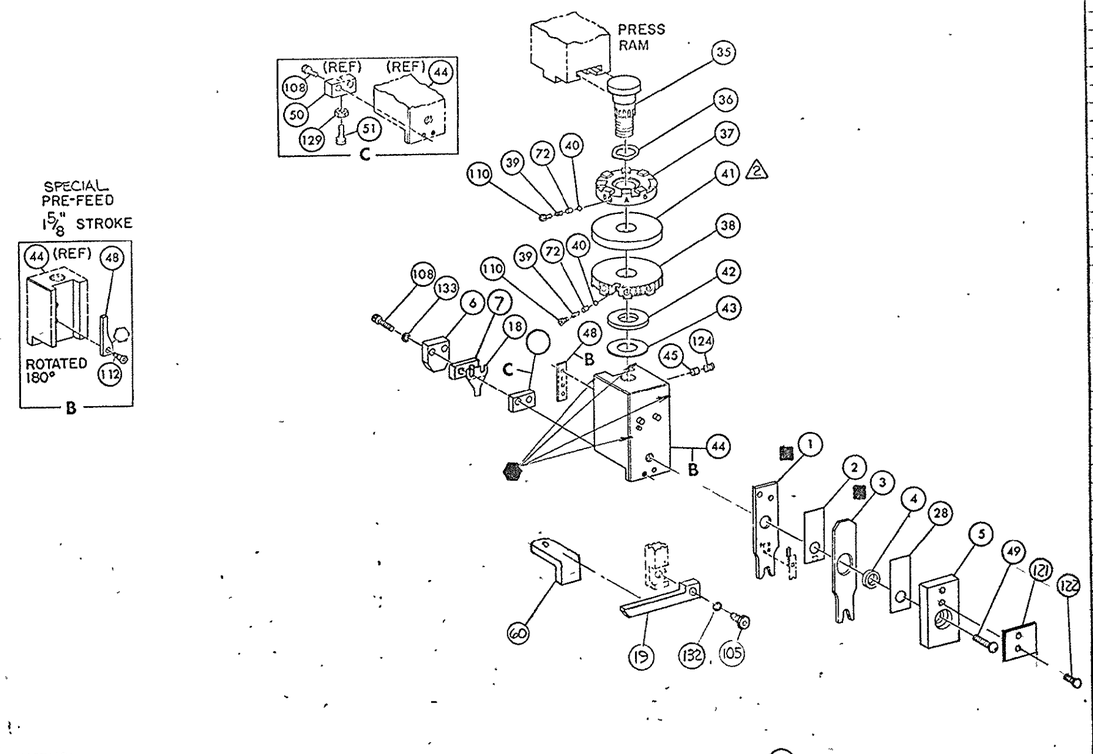

NOTES:

1.- ONLY THE ITEMS WITH QUANTITIES SPECIFIED ON PARTS LIST ARE USED ON THIS APPLICATOR.

2.-USED IN PLACE OF ITEM 38 WHEN INSULATION CRIMP IS NOT USED.

3-FEED PIVOT-CENTER HOLE

4. CUT TO LENGTH AT ASS'Y.

KEY:

-RECOMMENDED SPARE PARTS [redacted]

-GREASE WEEKLY

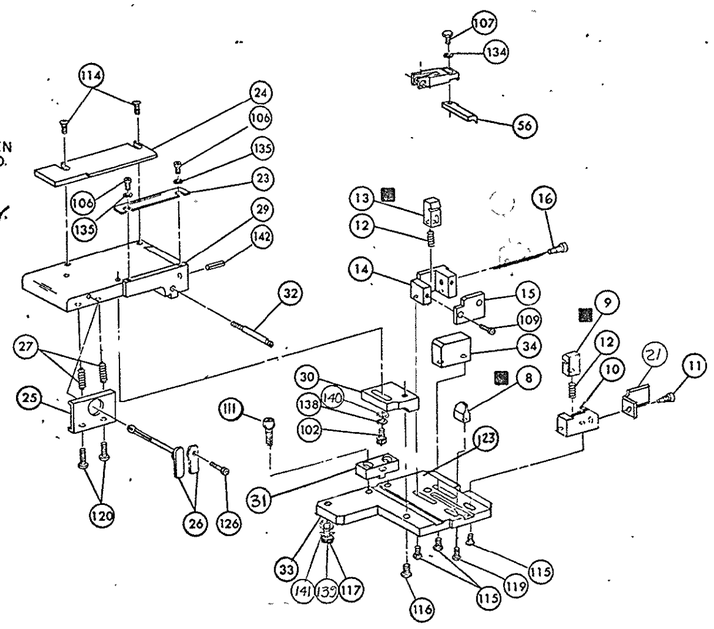

QTY	PART NO	DESCRIPTION	ITEM NO
			145
~~1~~	~~453615-1~~	~~PLATE, TERMINAL NO~~	144
~~2~~	~~690701-2~~	~~PLATE, SERIAL NO~~	143
1	4-21028-0	PIN, SLOT SPR (.093 DIA X .75) STR G PLATE	142
1	21899-2	WASHER, FLAT (NO 10) MOUNTING	141
1	21899-2	WASHER, FLAT (NO 10) S. G. ADJ BLOCK	140
1	21024-5	WASHER, LOCK (NO 10) MOUNTING	139
1	21024-5	WASHER, LOCK (NO 10) STRIP GUIDE ADJ BLOCK	138
			137
			136
2	21057-2	WASHER, LOCK (NO 4) FRONT STRIP GUIDE	135
REF	21024-4	WASHER, LOCK (NO 8) FEED FINGER	134
2	21024-4	WASHER, LOCK (NO 8) DEPRESSOR	133
REF	21024-4	WASHER, LOCK (NO 8) STRIPPER	132
			131
			130
—	21068-5	NUT, HEX MACH (6-32) HOLDDOWN	129
			128
			127
—	22353-8	SCR, SHLD. (.187 DIA X .250 LG) DRAG LEVER	126
			125
1	21009-2	SCR, SKT SET (1/4-20 X .25) (LOC-WEL) RAM	124
1	690701-2	PLATE, ID	123
4	21017-2	SCR, DRIVE (# 2 X .188 LG)	122
1	819347-1	PLATE, I.D.	121
2	3-21002-0	SCR, BUT HD SKT CAP (10-32 X .75) DRAG	120
1	22733-8	SCR, BUT HD SKT CAP (8-32 X .38) (LOC-WEL) ANVIL	119
			118
1	3-21000-9	SCR, SOC HD SKT CAP (10-32 X 1.00) MOUNTING	117
1	2-21002-7	SCR, BUT HD SKT CAP (10-32 X .50) SG ADJ BLOCK	116
4	2-21002-2	SCR, BUT HD SKT CAP (8-32 X .50) SHEAR	115
2	2-21002-2	SCR, BUT HD SKT CAP (8-32 X .50) R STRIP GUIDE	114
			113
1	1-21002-7	SCR, BUT HD SKT CAP (6-32 X .50) CAM	112
2	2-21000-7	SCR, SKT HD CAP (8-32 X .50) SCR. BLOCK	111
2	23030-1	SCR, SKT HD CAP (6-32 X .25) (LOC-WEL) CP DISC	110
2	1-21000-8	SCR, SKT HD CAP (6-32 X .25) REAR SHEAR PLATE	109
2	3-21000-0	SCR, SKT HD CAP (8-32 X .81) DEPRESSOR (REAR) 4	108
REF	2-21002-1	SCR, BUT HD MACH (8-32 X .38) FEED FINGER	107
2	1-21000-3	SCR, SKT HD CAP (4-40 X .25) F STRIP GUIDE	106
REF	2-21002-1	SCR, BUT HD CAP (8-32 X .38) STRIPPER	105
			104
			103
1	3-22603-1	SCR, HEX HD CAP (10-32 X .38) SG ADJ BLOCK	102
			101
			79
			78
2	463310-6	BLADE, STRIPPING (#22)	77
			76
			75
			74
			73
2	690603-1	SPRING, ASSIST	72
			71
			70
			69
			68
			67
			66
			65
			64
			63
			62
			61
REF.	469484-1	STOP, WIRE	60

QTY	PART NO	DESCRIPTION	ITEM NO
			59
			58
			57
REF	694433-8	PAWL FEED	56
			55
			54
			53
			52
		BUMPER, HOLDDOWN	51
		SPACER, TONKER	50
1	7-21002-9	BOLT, CRIMPER (BUT HD 5/16-24 UNF X 1.00)	49
1	690602-6	CAM PRE FEED 1.62 STROKE	48
			47
			46
1	690191-1	PLUG, NYLON	45
1	455673-1	RAM	44
1	690125-1	WASHER, LAMINATED	43
1	690124-1	WASHER, RAM	42
		DISC, SPACER	41
2	23241-6	BALL, STEEL	40
2	690170-1	SPRING, COMPRESSION	39
1	690142-1	DISC, INSULATION	38
1	5-690692-9	DISC, WIRE	37
1	22480-5	WASHER, SPRING	36
1	690212-1	POST, RAM	35
		SUPPORT, TERMINAL	34
1	462544-1	PLATE, BASE SPECIAL	33
1	690432-3	SCREW, ADJUSTMENT	32
1	462543-1	BLOCK, SCREW SPECIAL	31
1	455689-1	BLOCK, STRIP GUIDE ADJ	30
1	455671-2	PLATE, STRIP GUIDE	29
1	1-455888-0	SPACER, FRONT SHEAR DEPRESSOR	28
2	1-22284-0	SPRING, DRAG	27
1	690546-1	LEVER, DRAG RELEASE	26
1	240792-1	DRAG, STOCK	25
1	3-690504-6	GUIDE STRIP (REAR)	24
1	690438-1	GUIDE, STRIP (FRONT)	23
			22
1	463756-1	GUIDE, SCRAP	21
			20
1	462615-4	STRIPPER	19
1	1-690518-9	HOLDER, TERMINAL	18
~~1~~	~~690463-1~~	~~GUARD, CHIP (REAR)~~	17
1	690461-1	STOP, SHEAR (REAR)	16
1	690691-9	PLATE, SHEAR (REAR)	15
1	681023-1	HOLDER, SHEAR (REAR)	14
1	690463-1	SHEAR, FLOAT (REAR)	13
2	5-22280-0	SPRING, SHEAR	12
1	690461-2	STOP, SHEAR (FRONT)	11
1	462548-1	HOLDER, SHEAR (FRONT) SPECIAL	10
1	462547-1	SHEAR, FLOAT (FRONT) SPECIAL	9
1	3-690512-6	ANVIL	8
1	6-240641-8	SPACER, DEPRESSOR (REAR)	7
1	690468-1	DEPRESSOR, SHEAR (REAR)	6
1	462838-1	DEPRESSOR, SHEAR (FRONT) SPECIAL	5
1	238011-6	SPACER, TUBULAR, INS CRIMPER	4
1	4-456135-1	CRIMPER, INSULATION	3
1	455888-4	SPACER, CRIMPER	2
1	2-456402-6	CRIMPER, WIRE	1
QTY	PART NO	DESCRIPTION	ITEM NO

CRIMPING DATA

VISIBLE PAD LTR	CRIMP HEIGHT	WIRE SIZE	WIRE STRIP LENGTH
A	.033	24	
B	NOT	USED	
C	.040	20 5	
D	.036	22	

CRIMP	SIZE	TYPE	FEED	APPL INST
WIRE	.055	F	.330	A1
INSUL	.062	O		

WIRE RANGE	INSULATION RANGE	PRESS NO
24-22 5	.048-.055	463345-1

REMARKS 5 WIRE SIZE #20 NOT RECOMMENDED.

APPLICATOR WILL APPLY

583853
531477
531481
530227

REMARKS		NO / TO APPLY TERMINAL	REV
APPL USED ON MACHINE PART NO	MACH SERIAL NO	DISTRIBUTION	
CUSTOMER NAME	APPL SERIAL NO	ORIGINAL	
ADDRESS	PURCHASE ORDER	CUSTOMER COPY	
CITY	ENG APP	FIELD ENG COPY	

SIM 466622 APPLICATION SPEC 114-9004

P	F	LTR	REVISION RECORD	APP	DATE
		G	ECN 0150-0549-01	TE	5-01
		F2	0150-0267-00		
		F1	0150-6280-96		
V		F	ECN A-045855		05/08/82-88
		E1	DARKENED		
V		E	REV PER R-5105	R	583
V		D2	REV PER ECN R3838		
V		D1	REV. PER ECN R5108		10-29-80
V		D	REV PER ECN R3326		11/29
V		C1	REV PER ECN R2875		8-14-78
V		C	REV ITEM 17 R2764		11-7-79
V		B	REV PER ECN R2708		10/78
V		A	REV PER R-2353		2-78
V		01	REV PER R-2091		2-6-2157

SET UP GAGE 10-1 458637-1 522
DR 1-18-77 APP
HK BEL LOC A C NO 466919-1 REV G
NAME AMPOMATIC STRIPPER CRIMPER APPLICATOR
SIDE FEED (TWIN LEAF CONTACT)

AMP INCORPORATED Harrisburg Pa

CODE IDENT 60779 — CUSTOMER AND ASSEMBLY DRAWING — RESTRICTED TO

1-610994

RELEASED FOR PUBLICATION

BY AMP INCORPORATED ALL RIGHTS RESERVED

THIS DRAWING IS UNPUBLISHED COPYRIGHT 2000

DIST 66

* Trademark of AMP Incorporated

AMP 2983-3 (8-73)