THIS DRAWING IS A CONTROLLED DOCUMENT FOR AMP INCORPORATED.
IT IS SUBJECT TO CHANGE AND THE CONTROLLING ENGINEERING
ORGANIZATION SHOULD BE CONTACTED FOR THE LATEST REVISION.

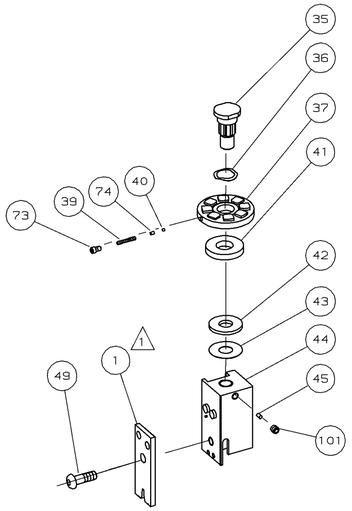

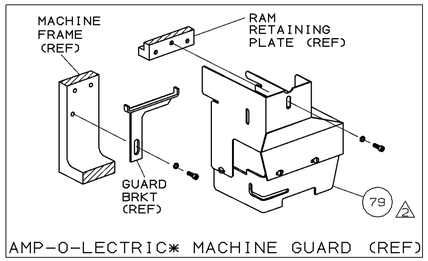

AMP-O-LECTRIC* MACHINE GUARD (REF)

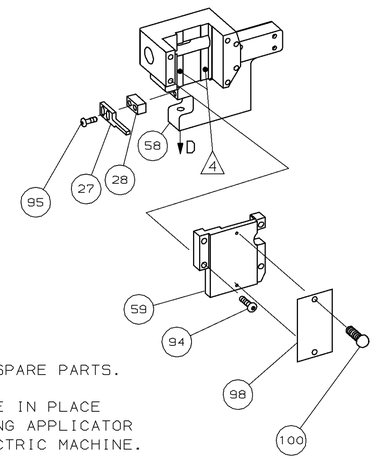

NOTES:

1. RECOMMENDED SPARE PARTS.
2. GUARD MUST BE IN PLACE WHEN OPERATING APPLICATOR IN AMP-O-ELECTRIC MACHINE.
3. LUBRICATE DAILY USING NO. 20 MACHINE OIL.
4. GREASE LIGHTLY.

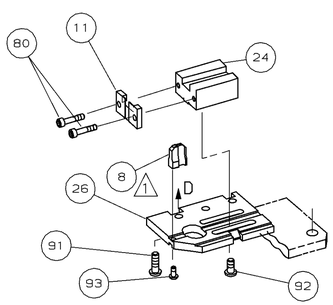

QTY	PART NO	DESCRIPTION	ITEM NO
			124
			123
			122
			121
			120
			119
			118
			117
			116
			115
			114
			113
			112
			111
			110
			109
			108
			107
			106
			105
			104
			103
			102
1	21009-2	SCR,SKT SET(1/4-20x.25 LOC-WEL)RAM	101
2	21017-2	SCR,DRIVE(#2x.19)IDENT PLATE	100
			99
1	461264-1	PLATE, IDENTIFICATION	98
			97
			96
2	2-21002-2	SCR,BHC(8-32x.50)STRIPPER	95
4	2-21002-9	SCR,BHC(10-32x.75)HSG CAP	94
1	22733-8	SCR,BHC(8-32x.38 LOC-WEL)ANVIL	93
4	3-21002-3	SCR,BHC(1/4-20x.50)LOC BLOCK	92
3	2-22733-8	SCR,BHC(1/4-20x.62)BASE PL	91
			90
			89
			88
			87
			86
			85
			84
			83
			82
			81
2	3-21000-7	SCR,SKT CAP(10-32x.75)LOC PLATE	80
1	455750-7	GUARD, ASSY 2	79
			78
			77
			76
			75
1	690603-1	SPRING, ASSIST	74
1	23030-1	SCR,SKT CAP(6-32x.25)CP DISC	73
			72
			71
			70
			69
			68
			67
			66
			65
			64
			63
			62
			61
			60

QTY	PART NO	DESCRIPTION	ITEM NO
1	454220-1	CAP, RAM	59
1	453736-1	HOUSING	58
1	7-21002-9	BOLT, CRIMPER(5/16-24x1.00)	49
1	690191-1	PLUG, NYLON	45
1	455674-1	RAM	44
1	690125-1	WASHER, LAMINATED	43
1	690124-1	WASHER, RAM	42
1	690223-1	DISC, SPACER	41
1	23241-6	BALL, STEEL	40
1	690170-1	SPRING, COMPRESSION	39
1	1-690141-7	DISC, WIRE	37
1	22480-5	WASHER, SPRING	36
1	690212-1	POST, RAM	35
1	3-690451-2	SPACER, STRIPPER	28
1	240639-1	STRIPPER	27
1	455676-1	PLATE, BASE	26
1	852604-1	BLOCK, LOCATOR	24
1	852605-1	PLATE, LOCATOR	11
1	6-240654-6	ANVIL 1	8
1	456413-2	CRIMPER, INSULATION 1	1

CRIMPING DATA				APPLICATOR WILL APPLY
PAD LTR	CRIMP HEIGHT	INS SIZE	WIRE STRIP LENGTH	943072-1
A	NOT	USED		943072-2
B	.184	.200 DIA		
C	.180	.200 DIA		
D	.176	.200 DIA		

CRIMP	SIZE	TYPE	FEED	APPL INST
WIRE	-	-	-	A1 8039
INSUL	.220	F		

WIRE RANGE	INSULATION RANGE	MACHINE NO
-	.200 DIA	565435-5

REMARKS

AMP-O-LECTRIC
LOOSE PIECE

REMARKS		NO	REV
		TO APPLY TERMINAL	
APPL USED ON MACHINE PART NO	MACH SERIAL NO	DISTRIBUTION	
CUSTOMER NAME	APPL SERIAL NO	ORIGINAL	
ADDRESS	PURCHASE ORDER	CUSTOMER COPY	
CITY	ENG APP	FIELD ENG COPY	

P	F	LTR	REVISION RECORD	APP	DATE
		B1	REACT,0150-7199-96	CE	9-96
		B	OBS,0150-6782-96	CE	4-96
		A1	ECN 0150-4559-93	CE	6/93
		A	ECN A-350492	LK	1-92

SET UP GAGE 458638-1 | 10-1 L1349
DR 10/4/89 P.MATHIAS | APP 10-18-89 B. WOLFE
CHK 10-17-89 C. ERISMAN | REL 10/19/89 DEITRICH

AMP | AMP INCORPORATED Harrisburg, Pa.

LOC A | D | NO 567347-1 | REV B1

NAME MINIATURE QUICK CHANGE APPLICATOR
END FEED (STRAIN RELIEF)

THIS INFORMATION IS CONFIDENTIAL AND IS DISCLOSED TO YOU ON CONDITION THAT
NO FURTHER DISCLOSURE IS MADE BY YOU TO OTHER THAN AMP PERSONNEL WITHOUT
WRITTEN AUTHORIZATION FROM AMP INCORPORATED, HARRISBURG, PA.

DIST 66

* Trademark of AMP Incorporated