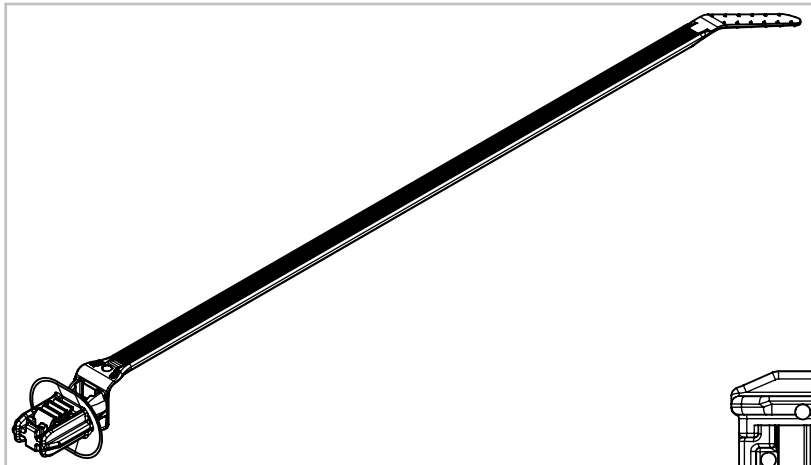

04 PERFORMANCE REQUIREMENTS:

1. FIR TREE PUSH IN FORCE: 12LBS MAX IN A 7.0MM X 12.0MM HOLE AND A SHEET METAL THICKNESS OF 1.8MM
2. FIR TREE PULL OUT FORCE: 45LBS MIN IN A 7.0MM X 12.0MM HOLE AND A SHEET METAL THICKNESS OF 1.8MM
3. PANEL THICKNESS RANGE: .6MM - 4.0MM
4. CABLE TIE TENSILE STRENGTH: 50LBS MIN
5. MINIMUM BUNDLE DIAMETER: 1.6MM
6. MAXIMUM BUNDLE DIAMETER: 50MM

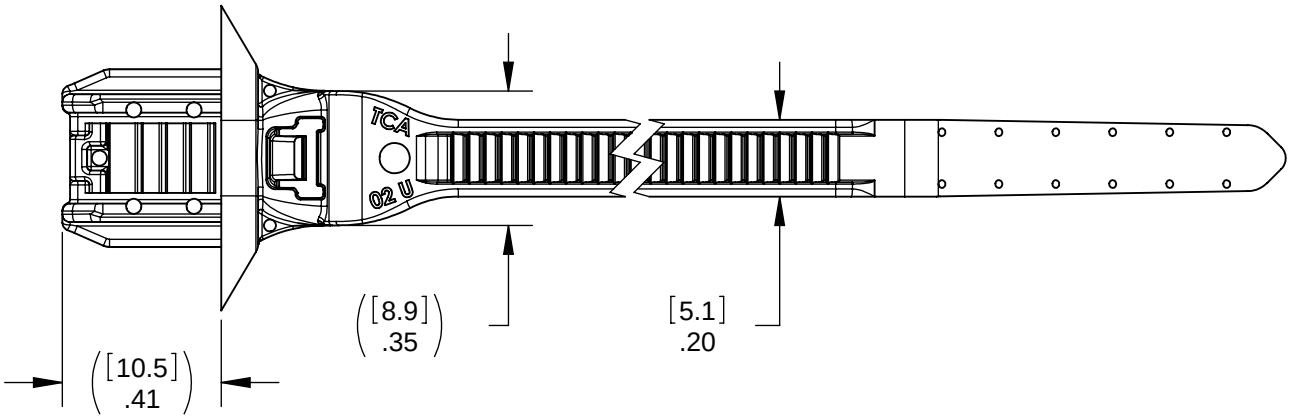

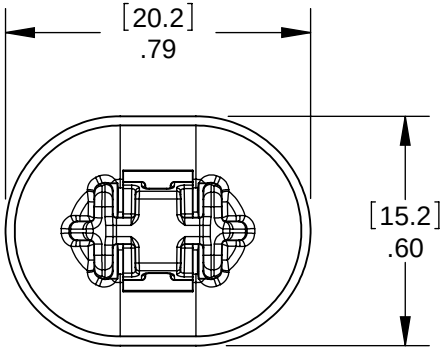

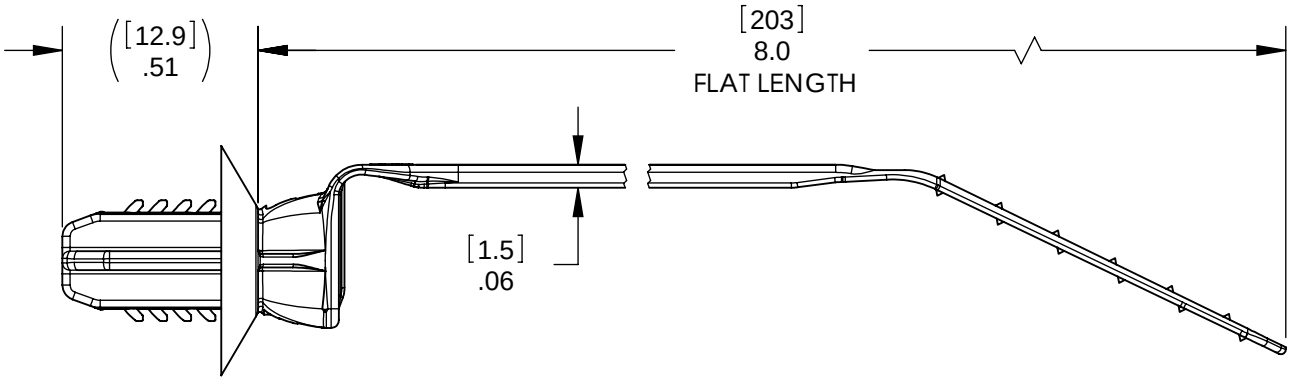

INVENTORS	HellermannTyton®	REVISION	DRAWING	DIMENSIONS	PART	DRAWING	
	ALL PROPRIETARY RIGHTS IN THE SUBJECT MATTER SHOWN ON THIS DRAWING ARE EXCLUSIVE PROPERTY OF HELLERMANNTYTON		level 04	TOLERANCES: .XXXX = [±.127]/±0.005; .XXX = [±.25]/±0.01; .XX = [±.5]/±0.02; .X = [±6.4]/±0.25; ∠ = ±0.5°; unless otherwise specified	number T50ROSFT7X12U	format version N AH	CAD SW 2007
	name / date / city, state		by JJP		phase 04 Production	scale 2:1	
			date 05/08/2008		name: RECTANGULAR FIR TREE CABLE TIE	computer file name ct06-027-012CST_04	previous drawing number
			ECN # 011028	units [milimeters]/inches	material: NYLON 6/6 HS BLACK	drawn JJP 03/07/2007	checked SJA 05/08/2008
			part level A/C			approved	
						type Customer	sheet 1 of 1
						number CT06-027-012CST	