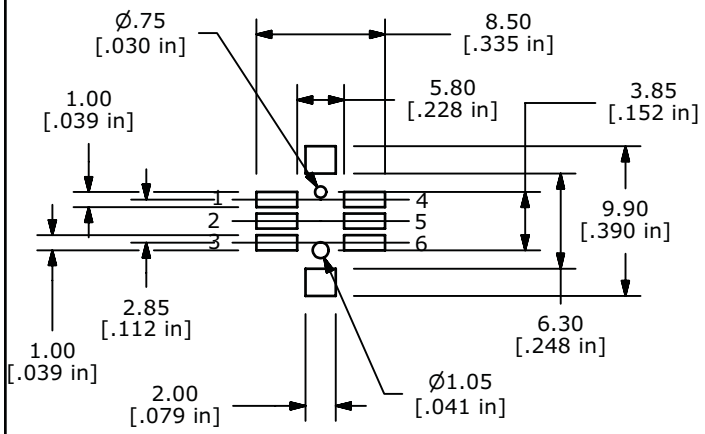

SOLDER LAYOUT

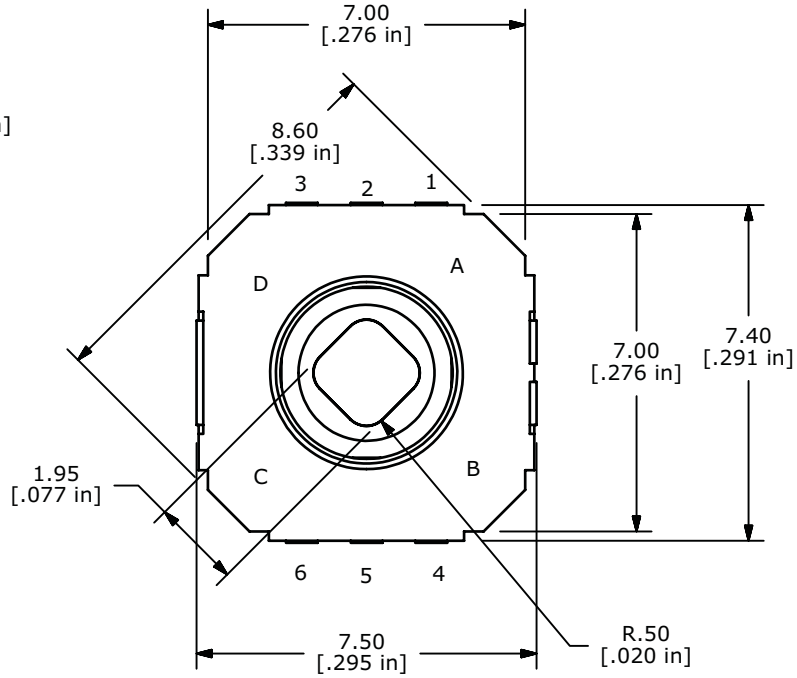

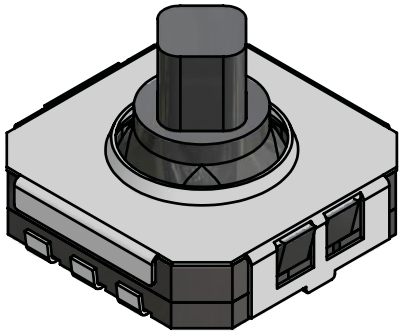

ISOMETRIC

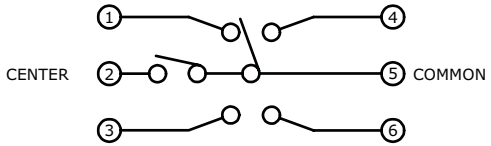

CIRTUIT DIAGRAM

OPERATING POSITION	CIRCUIT
A	5-1
B	5-4
C	5-6
D	5-3
CENTER PUSH	5-2

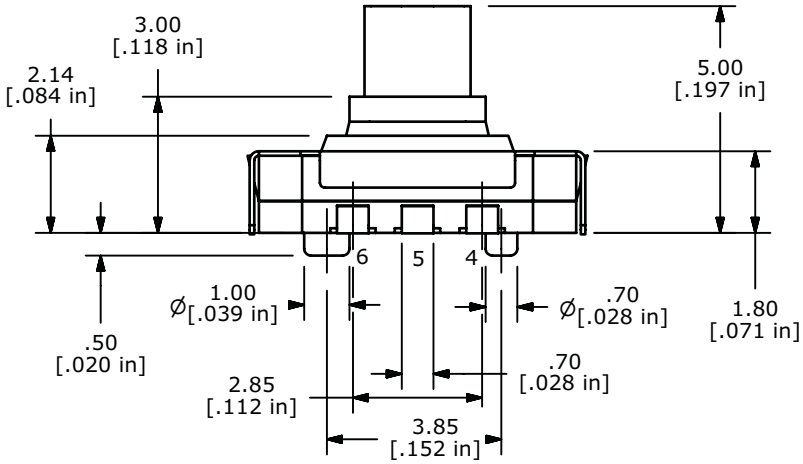

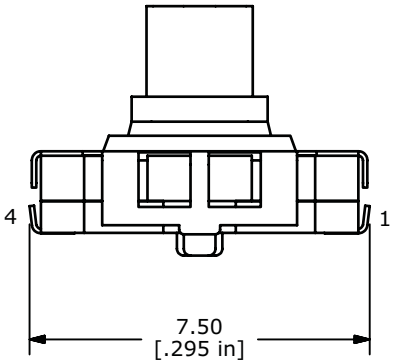

NOTES:
1. RATING: 12V DC 50mA MAX.
2. CONTACT RESISTANCE: 500 milli OHMS MAX.
3. OPERATING FORCES: CENTER PUSH: 320gf ± 70gf
   STROKE: 0.15± 0.1 mm
   4-WAY DIRECTION: 160gf ± 50gf
4. LIFE CYCLES: 200,000
5. GENERAL TOLERANCE: ± 0.3

E-SWITCH®

REV	PCR NO	DESCRIPTION	DATE	BY
A	15947	NEW RELEASE	4/5/06	PH

THE INFORMATION CONTAINED IN THIS DOCUMENT IS PROPRIETARY
TO E-SWITCH AND IS NOT TO BE COPIED OR TRANSFERRED

TITLE	SCALE	DATE	DR	DWG	REV
JS1200AAQ	6:1	4/5/2006	PH	P000500	A