O.P. (MM)	P.T. (MM)
15.5 ± 0.8	4.1 MAX.

O.P. = OPERATING POINT
P.T. = PRE-TRAVEL

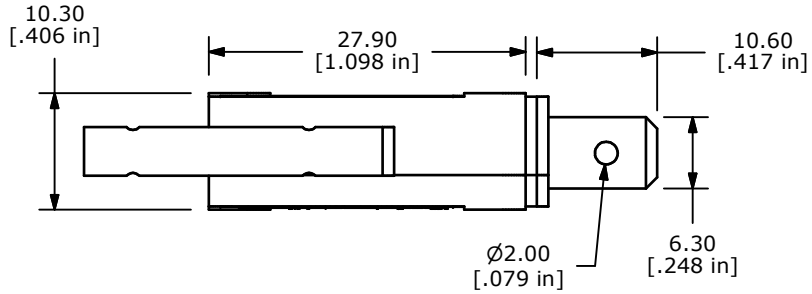

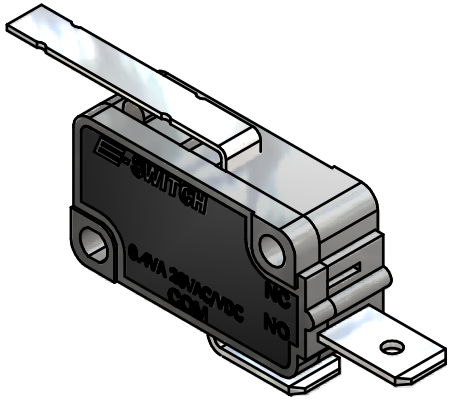

ISOMETRIC

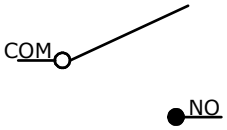

CIRCUIT: SPDT

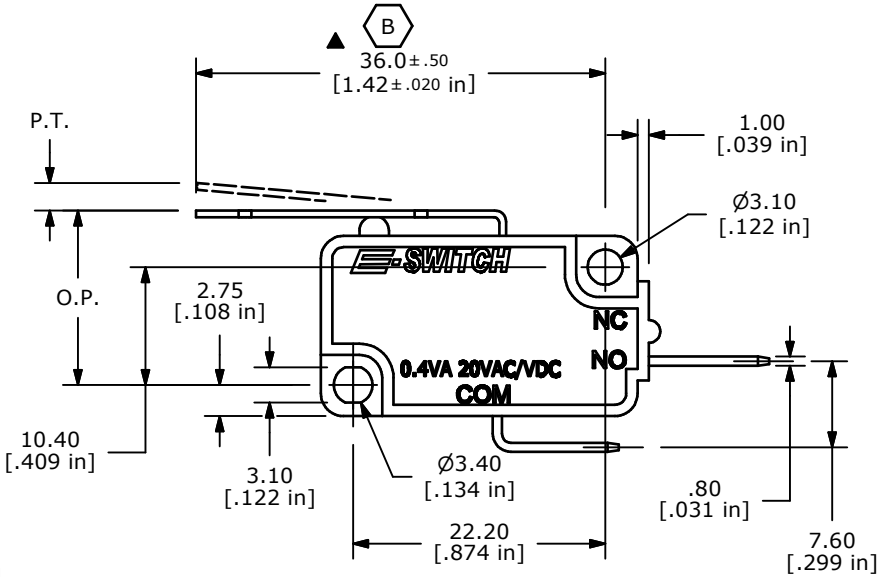

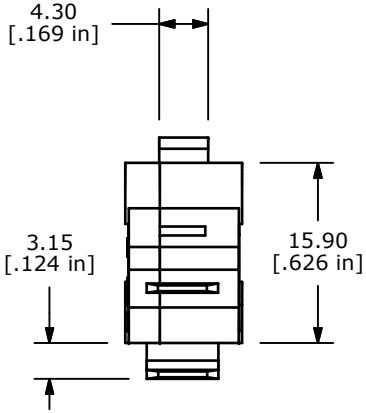

NOTES:
1. ALL DIMENSIONS IN MM [INCH]
2. GENERAL TOLERANCE: X.X=± 0.4
   X.XX=± 0.25
3. RATING: 0.4VA @20V (AC or DC)
4. ▲ OPERATING FORCE: 45 ± 20 GRAMS
5. OPERATING TEMP: -25˚C TO 85˚C
6. ELECTRICAL LIFE: 50,000 CYCLES MIN.
7. MECHANICAL LIFE: 1,000,000 CYCLES TYP.
8. INSULATION RESISTANCE: 100 MEGA-OHMS MIN.
9. DIELECTRIC STRENGTH: 1500VAC 1 MINUTE (INITAL VALUE)
10. CONTACT RESISTANCE: 100 MILLI-OHMS MAX.
11. ▲ DENOTES CRITICAL PARAMETER.
12. 2002/95/EC (ROHS) COMPLIANT

REV	PCR NO	DESCRIPTION	DATE	BY
B	20757	36.0 WAS 36.6	9/17/12	EBP
A	18722	RELEASED FOR PRODUCTION	1/26/10	BLR

THE INFORMATION CONTAINED IN THIS DOCUMENT IS PROPRIETARY TO E-SWITCH AND IS NOT TO BE COPIED OR TRANSFERRED

E-SWITCH® | LAMB INDUSTRIES

TITLE LS085R102F045C2C

SCALE	DATE	DR	DWG	REV
1.5:1	1/26/2010	BLR	Q950083	B